UNIVERSITY OF CAMBRIDGE INTERNATIONAL EXAMINATIONS
General Certificate of Education
Advanced Subsidiary Level and Advanced Level

PHYSICS **9702/11**

Paper 1 Multiple Choice **October/November 2010**

1 hour

Additional Materials: Multiple Choice Answer Sheet
Soft clean eraser
Soft pencil (type B or HB is recommended)

4840008096

READ THESE INSTRUCTIONS FIRST

Write in soft pencil.
Do not use staples, paper clips, highlighters, glue or correction fluid.
Write your name, Centre number and candidate number on the Answer Sheet in the spaces provided unless this has been done for you.

There are **forty** questions on this paper. Answer **all** questions. For each question there are four possible answers **A**, **B**, **C** and **D**.
Choose the **one** you consider correct and record your choice in **soft pencil** on the separate Answer Sheet.

Read the instructions on the Answer Sheet very carefully.

Each correct answer will score one mark. A mark will not be deducted for a wrong answer.
Any working should be done in this booklet.

IB10 11_9702_11/6RP
© UCLES 2010

Data

speed of light in free space,	$c = 3.00 \times 10^{8}\,\text{m s}^{-1}$
permeability of free space,	$\mu_0 = 4\pi \times 10^{-7}\,\text{H m}^{-1}$
permittivity of free space,	$\varepsilon_0 = 8.85 \times 10^{-12}\,\text{F m}^{-1}$
elementary charge,	$e = 1.60 \times 10^{-19}\,\text{C}$
the Planck constant,	$h = 6.63 \times 10^{-34}\,\text{J s}$
unified atomic mass constant,	$u = 1.66 \times 10^{-27}\,\text{kg}$
rest mass of electron,	$m_\text{e} = 9.11 \times 10^{-31}\,\text{kg}$
rest mass of proton,	$m_\text{p} = 1.67 \times 10^{-27}\,\text{kg}$
molar gas constant,	$R = 8.31\,\text{J K}^{-1}\,\text{mol}^{-1}$
the Avogadro constant,	$N_\text{A} = 6.02 \times 10^{23}\,\text{mol}^{-1}$
the Boltzmann constant,	$k = 1.38 \times 10^{-23}\,\text{J K}^{-1}$
gravitational constant,	$G = 6.67 \times 10^{-11}\,\text{N m}^2\,\text{kg}^{-2}$
acceleration of free fall,	$g = 9.81\,\text{m s}^{-2}$

© UCLES 2010

Formulae

uniformly accelerated motion, $s = ut + \frac{1}{2}at^2$

$v^2 = u^2 + 2as$

work done on/by a gas, $W = p\Delta V$

gravitational potential, $\phi = -\frac{Gm}{r}$

hydrostatic pressure, $p = \rho gh$

pressure of an ideal gas, $p = \frac{1}{3}\frac{Nm}{V}\langle c^2 \rangle$

simple harmonic motion, $a = -\omega^2 x$

velocity of particle in s.h.m., $v = v_0 \cos \omega t$

$v = \pm \omega \sqrt{x_0^2 - x^2}$

electric potential, $V = \frac{Q}{4\pi\varepsilon_0 r}$

capacitors in series, $1/C = 1/C_1 + 1/C_2 + \ldots$

capacitors in parallel, $C = C_1 + C_2 + \ldots$

energy of charged capacitor, $W = \frac{1}{2}QV$

resistors in series, $R = R_1 + R_2 + \ldots$

resistors in parallel, $1/R = 1/R_1 + 1/R_2 + \ldots$

alternating current/voltage, $x = x_0 \sin \omega t$

radioactive decay, $x = x_0 \exp(-\lambda t)$

decay constant, $\lambda = \frac{0.693}{t_{\frac{1}{2}}}$

© UCLES 2010

[Turn over

1 A signal has a frequency of 2.0 MHz.

What is the period of the signal?

A 2 μs **B** 5 μs **C** 200 ns **D** 500 ns

2 A metal sphere of radius r is dropped into a tank of water. As it sinks at speed v, it experiences a drag force F given by $F = krv$, where k is a constant.

What are the SI base units of k?

A $kg\,m^2\,s^{-1}$ **B** $kg\,m^{-2}\,s^{-2}$ **C** $kg\,m^{-1}\,s^{-1}$ **D** $kg\,m\,s^{-2}$

3 Which physical quantity would result from a calculation in which a potential difference is multiplied by an electric charge?

A electric current

B electric energy

C electric field strength

D electric power

Space for working

© UCLES 2010

4 The angular deflection of the needle of an ammeter varies with the current passing through the ammeter as shown in the graph.

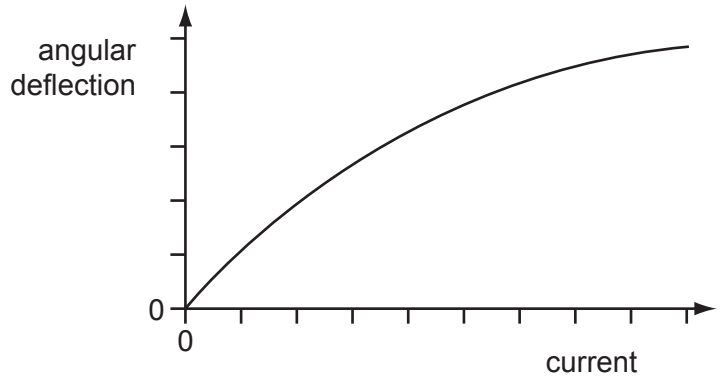

Which diagram could represent the appearance of the scale on this meter?

A



B



C



D



Space for working

5 The diagram shows a cathode-ray oscilloscope (c.r.o.) being used to measure the rate of rotation of a flywheel.

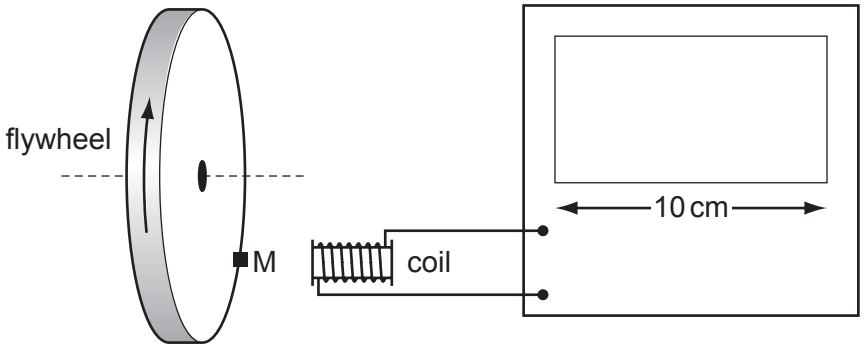

The flywheel has a small magnet M mounted on it. Each time the magnet passes the coil, a voltage pulse is generated, which is passed to the c.r.o. The display of the c.r.o. is 10 cm wide. The flywheel is rotating at a rate of about 3000 revolutions per minute.

Which time-base setting will display clearly separate pulses on the screen?

A $1\,s\,cm^{-1}$ **B** $10\,ms\,cm^{-1}$ **C** $100\,\mu s\,cm^{-1}$ **D** $1\,\mu s\,cm^{-1}$

Space for working

© UCLES 2010

6 A fixed quantity x_0 is measured many times in an experiment that has experimental uncertainty. A graph is plotted to show the number n of times that a particular value x is obtained.

Which graph could be obtained if the measurement of x_0 has a large systematic error but a small random error?

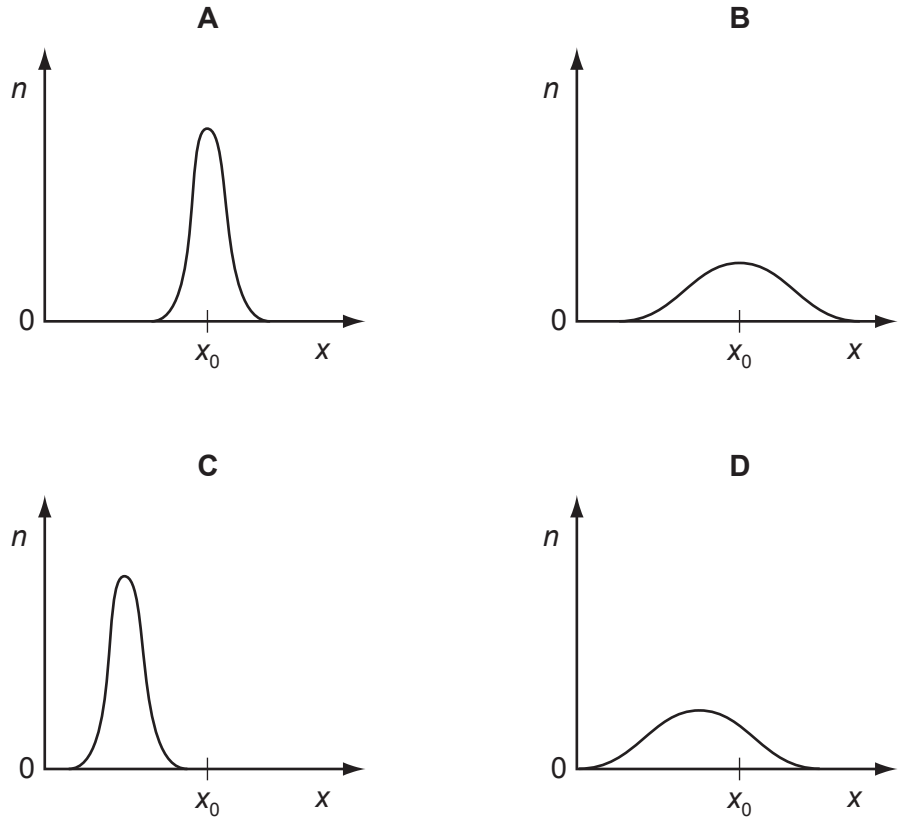

Space for working

7 A ball is thrown horizontally in still air from the top of a very tall building. The ball is affected by air resistance.

What happens to the horizontal and to the vertical components of the ball's velocity?

	horizontal component of velocity	vertical component of velocity
A	decreases to zero	increases at a constant rate
B	decreases to zero	increases to a constant value
C	remains constant	increases at a constant rate
D	remains constant	increases to a constant value

8 The velocity-time graph below is for a stone thrown vertically up into the air. Air resistance is negligible.

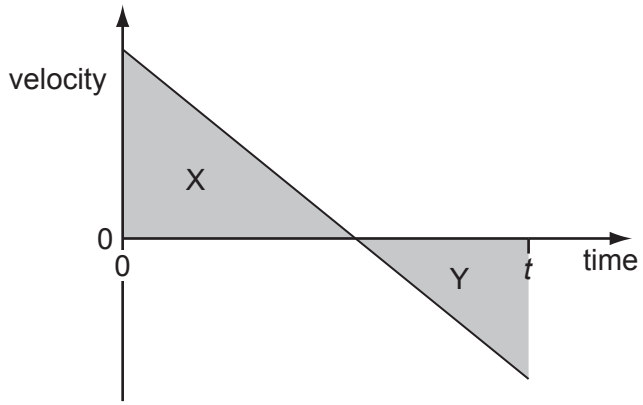

The stone is thrown up at time zero.

Area X represents a distance of 5 m. Area Y represents a distance of 3 m.

What is the displacement of the stone from its initial position at time *t*?

A 2 m **B** 3 m **C** 5 m **D** 8 m

Space for working

© UCLES 2010

9 In order that a train can stop safely, it will always pass a signal showing a yellow light before it reaches a signal showing a red light. Drivers apply the brake at the yellow light and this results in a uniform deceleration to stop exactly at the red light.

The distance between the red and yellow lights is x.

What must be the minimum distance between the lights if the train speed is increased by 20 %, without changing the deceleration of the trains?

A 1.20 x **B** 1.25 x **C** 1.44 x **D** 1.56 x

10 The gravitational field strength on the surface of planet P is one tenth of that on the surface of planet Q.

On the surface of P, a body has a mass of 1.0 kg and a weight of 1.0 N.

What are the mass and weight of the same body on the surface of planet Q?

	mass on Q / kg	weight on Q / N
A	1.0	0.1
B	1.0	10
C	10	10
D	10	100

11 A body, initially at rest, explodes into two masses M_1 and M_2 that move apart with speeds v_1 and v_2 respectively.

What is the ratio $\frac{v_1}{v_2}$?

A $\frac{M_1}{M_2}$ **B** $\frac{M_2}{M_1}$ **C** $\sqrt{\frac{M_1}{M_2}}$ **D** $\sqrt{\frac{M_2}{M_1}}$

Space for working

12 Two experiments are carried out using two trolleys of equal mass. All moving parts of the trolleys are frictionless, as is the surface that the trolleys move over. In both experiments, trolley X moves towards trolley Y, which is initially stationary.

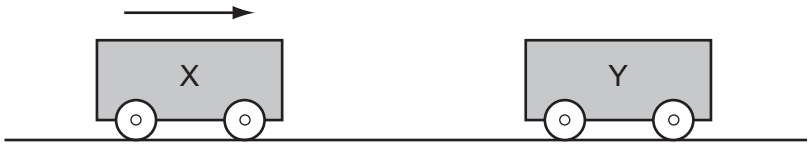

After the collision in experiment 1, X is stationary and Y moves off to the right.

After the collision in experiment 2, the trolleys join and move off together.

What types of collision occur in these experiments?

	experiment 1	experiment 2
A	elastic	elastic
B	elastic	inelastic
C	inelastic	elastic
D	inelastic	inelastic

13 A rigid L-shaped lever arm is pivoted at point P.

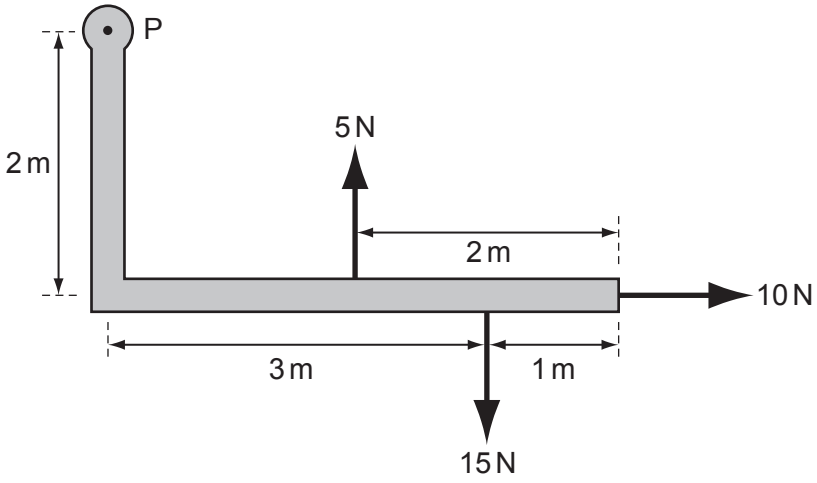

Three forces act on the lever arm, as shown in the diagram.

What is the magnitude of the resultant moment of these forces about point P?

A 15 N m **B** 20 N m **C** 35 N m **D** 75 N m

Space for working

© UCLES 2010

14 Two parallel forces, each of magnitude F, act on a body as shown.

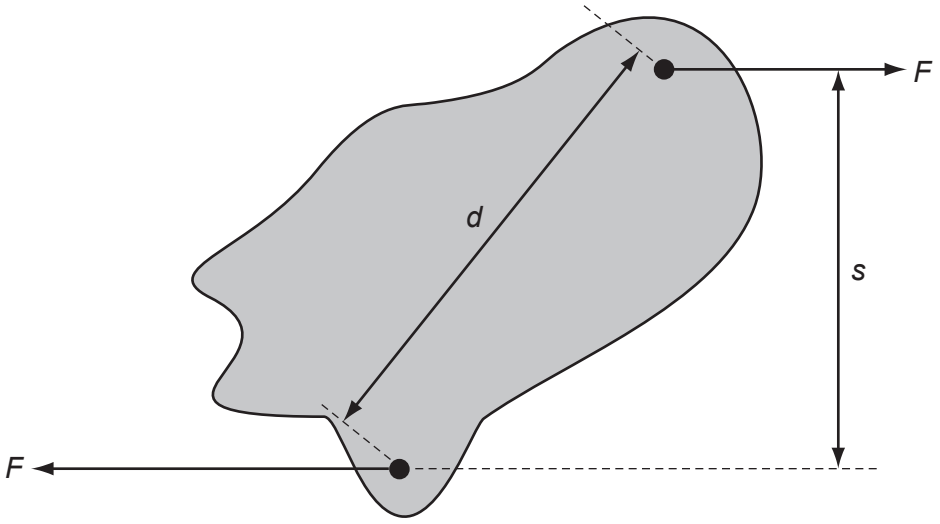

What is the magnitude of the torque on the body produced by these forces?

A Fd **B** Fs **C** $2Fd$ **D** $2Fs$

15 A street lamp is fixed to a wall by a metal rod and a cable.

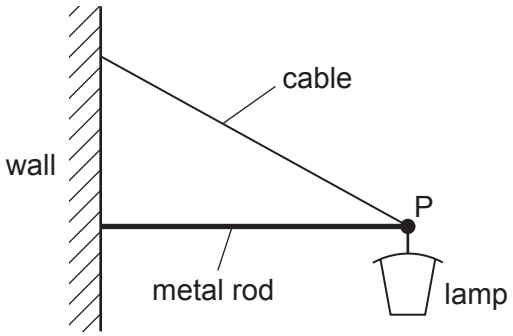

Which vector triangle represents the forces acting at point P?

A

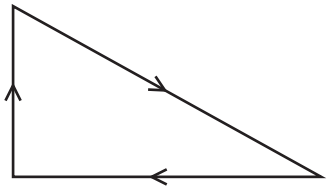

B

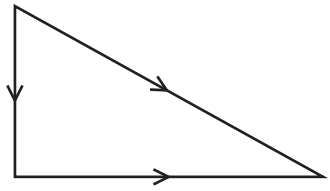

C

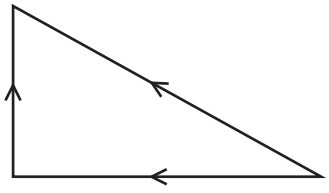

D

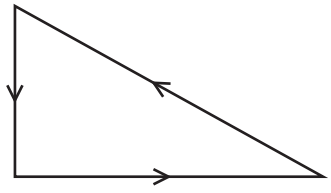

16 What is the internal energy of a system?

A the amount of heat supplied to the system

B the energy of the atoms of the system

C the total kinetic energy of the system

D the total potential energy of the system

17 A steam turbine is used to drive a generator. The input power to the turbine is P_I and the output power P_O. The power loss in the turbine is P_L, as shown below.

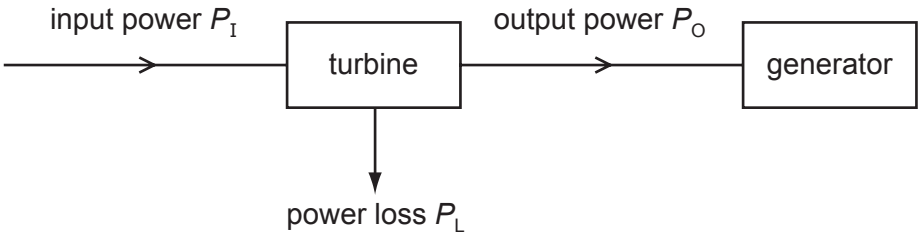

What is the efficiency of the turbine?

A $\frac{P_L}{P_O}$ **B** $\frac{P_I}{P_O}$ **C** $\frac{P_L}{P_I}$ **D** $\frac{P_O}{P_I}$

Space for working

18 The diagram shows a lift system in which the elevator (mass m_1) is partly counterbalanced by a heavy weight (mass m_2).

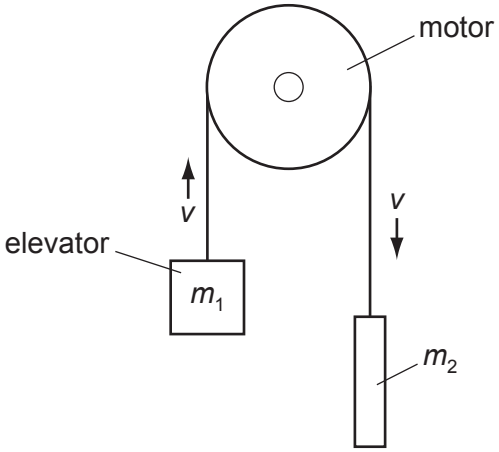

At what rate does the motor provide energy to the system when the elevator is rising at a steady speed v? (g = acceleration of free fall)

A $\frac{1}{2} m_1 v^2$

B $\frac{1}{2} (m_1 - m_2) v^2$

C $m_1 g v$

D $(m_1 - m_2) g v$

19 The Mariana Trench in the Pacific Ocean has a depth of about 10 km.

Assuming that sea water is incompressible and has a density of about 1020 kg m^{-3}, what would be the approximate pressure at that depth?

A 10^5 Pa **B** 10^6 Pa **C** 10^7 Pa **D** 10^8 Pa

Space for working

20 A student writes some statements about solids, liquids and gases.

1 Solids are rigid because the molecules in a solid vibrate.

2 Liquids flow because the molecules in a liquid are closer than in a gas.

3 Gases are less dense than liquids because the molecules in a gas move randomly.

Which statements are correct?

A 1 only

B 1 and 3 only

C 2 and 3 only

D none of the above

21 The graph shows how force depends on extension for a certain spring.

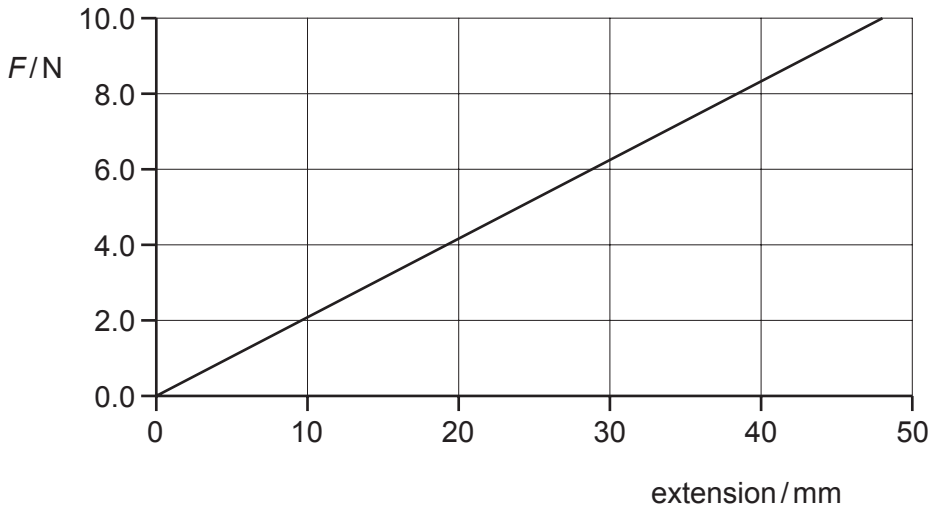

What is the energy stored in the spring when the extension is 30 mm?

A 0.095 J **B** 0.19 J **C** 0.25 J **D** 0.95 J

Space for working

22 A wire consists of a 3.0 m length of metal X joined to a 1.0 m length of metal Y.

The cross-sectional area of the wire is uniform.

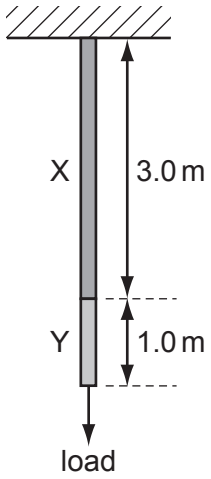

A load hung from the wire causes metal X to stretch by 1.5 mm and metal Y to stretch by 1.0 mm.

The same load is then hung from a second wire of the same cross-section, consisting of 1.0 m of metal X and 3.0 m of metal Y.

What is the total extension of this second wire?

A 2.5 mm **B** 3.5 mm **C** 4.8 mm **D** 5.0 mm

Space for working

© UCLES 2010

23 The graph shows how the displacement of a particle in a wave varies with time.

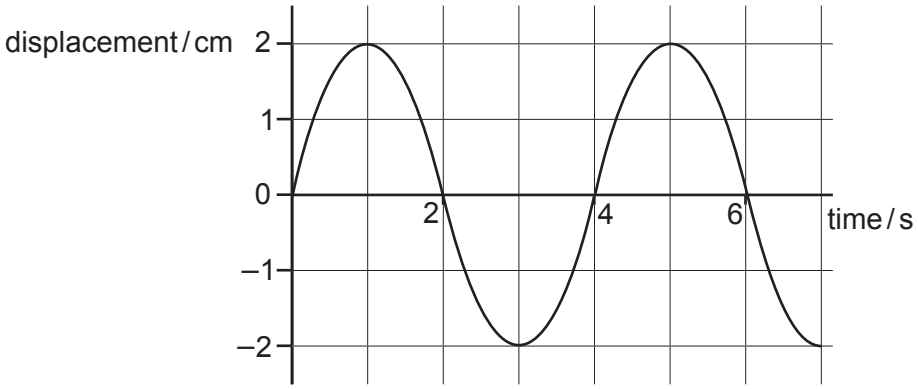

Which statement is correct?

A The wave has an amplitude of 2 cm and could be either transverse or longitudinal.

B The wave has an amplitude of 2 cm and must be transverse.

C The wave has an amplitude of 4 cm and could be either transverse or longitudinal.

D The wave has an amplitude of 4 cm and must be transverse.

24 The diagram shows a vertical cross-section through a water wave moving from left to right.

At which point is the water moving upwards with maximum speed?

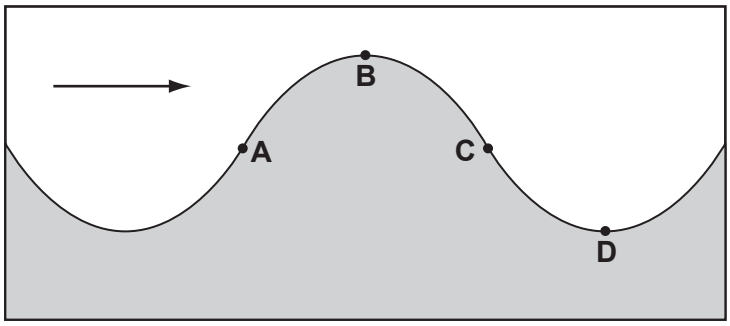

Space for working

© UCLES 2010

25 When plane-polarised light of amplitude a is passed through a polarising filter as shown, the amplitude of the light emerging is $a\cos\theta$.

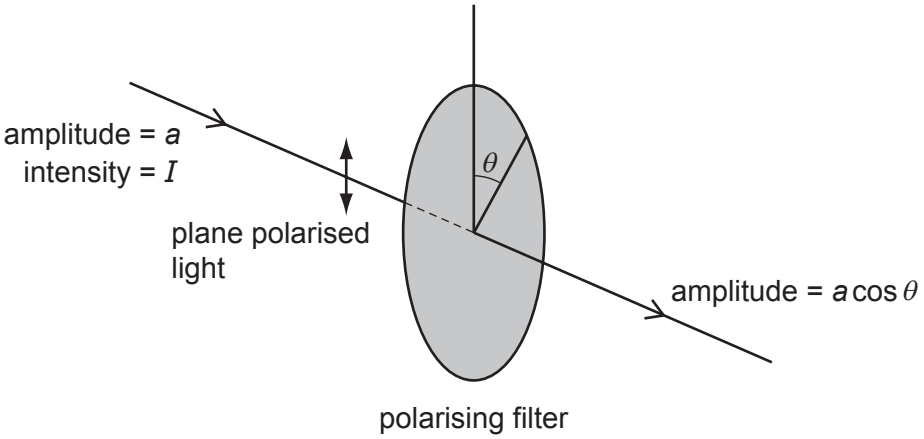

The intensity of the initial beam is I.

What is the intensity of the emerging light when θ is 60.0°?

A $0.250\,I$ **B** $0.500\,I$ **C** $0.750\,I$ **D** $0.866\,I$

26 A stationary wave is produced by two loudspeakers emitting sound of the same frequency.

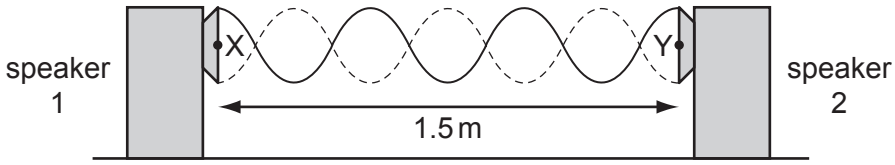

When a microphone is moved between X and Y, a distance of 1.5 m, six nodes and seven antinodes are detected.

What is the wavelength of the sound?

A 0.50 m **B** 0.43 m **C** 0.25 m **D** 0.21 m

Space for working

© UCLES 2010

27 Which electromagnetic wave would cause the most significant diffraction effect for an atomic lattice of spacing around 10^{-10} m?

A infra-red

B microwave

C ultraviolet

D X-ray

28 An electron is in an electric field of strength 5×10^4 V m^{-1}. The field is the only influence on the electron.

The mass and charge of an electron are known.

Which quantity can be calculated without any more information?

A the force on the electron

B the momentum of the electron

C the kinetic energy of the electron

D the speed of the electron

Space for working

© UCLES 2010

29 Electrons are accelerated and then directed into the uniform electric field between two parallel plates in a vacuum.

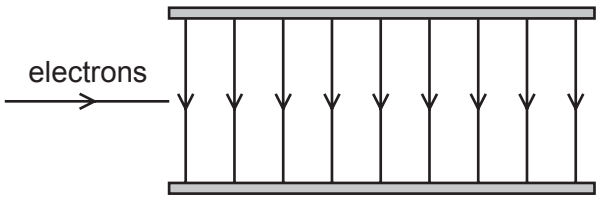

What best describes the shape of the path followed by the electrons in the field?

A a downwards curve along a line that is part of a circle

B a downwards curve along a line that is **not** part of a circle

C an upwards curve along a line that is part of a circle

D an upwards curve along a line that is **not** part of a circle

30 A charged particle is in the electric field between two horizontal metal plates connected to a source of constant potential difference, as shown. There is a force F on the particle due to the electric field.

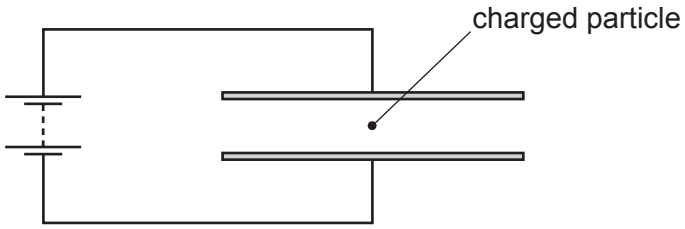

The separation of the plates is doubled.

What will be the new force on the particle?

A $\frac{F}{4}$ **B** $\frac{F}{2}$ **C** F **D** $2F$

Space for working

31 The current in the circuit shown is 4.8 A.

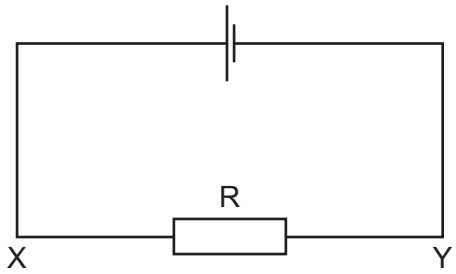

What is the direction of flow and the rate of flow of electrons through the resistor R?

	direction of flow	rate of flow
A	X to Y	$3.0 \times 10^{19}\,s^{-1}$
B	X to Y	$6.0 \times 10^{18}\,s^{-1}$
C	Y to X	$3.0 \times 10^{19}\,s^{-1}$
D	Y to X	$6.0 \times 10^{18}\,s^{-1}$

Space for working

© UCLES 2010

32 Which component has the I-V graph shown?

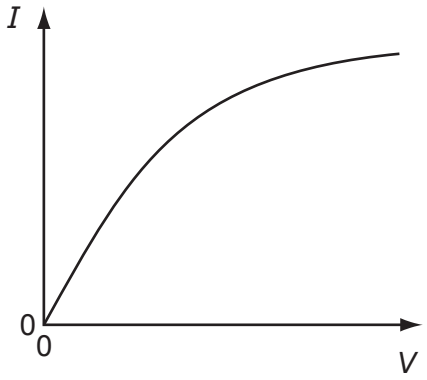

A filament lamp

B light-dependent resistor

C semiconductor diode

D thermistor

33 A copper wire is cylindrical and has resistance R.

What will be the resistance of a copper wire of twice the length and twice the radius?

A $\frac{R}{4}$ **B** $\frac{R}{2}$ **C** R **D** $2R$

34 A relay is required to operate 800 m from its power supply. The power supply has negligible internal resistance. The relay requires 16.0 V and a current of 0.60 A to operate.

A cable connects the relay to the power supply and two of the wires in the cable are used to supply power to the relay.

The resistance of each of these wires is 0.0050 Ω per metre.

What is the minimum output e.m.f. of the power supply?

A 16.6 V **B** 18.4 V **C** 20.8 V **D** 29.3 V

Space for working

35 The diagram shows part of a circuit.

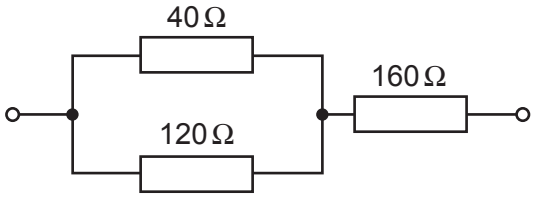

What is the total resistance of the combination of the three resistors?

A 320 Ω **B** 240 Ω **C** 190 Ω **D** 80 Ω

36 The diagram shows an arrangement of resistors.

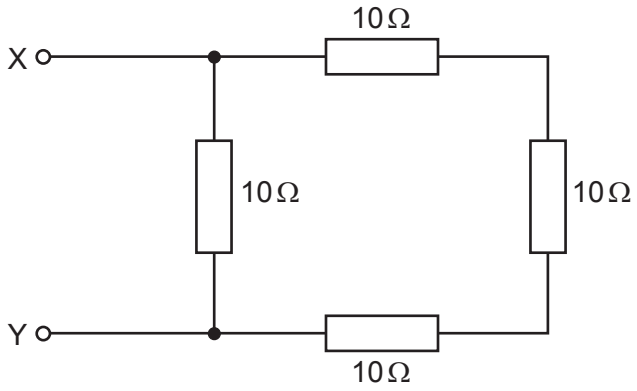

What is the total electrical resistance between X and Y?

A less than 1 Ω

B between 1 Ω and 10 Ω

C between 10 Ω and 30 Ω

D 40 Ω

Space for working

37 In the circuit below, P is a potentiometer of total resistance 10 Ω and Q is a fixed resistor of resistance 10 Ω. The battery has an e.m.f. of 4.0 V and negligible internal resistance. The voltmeter has a very high resistance.

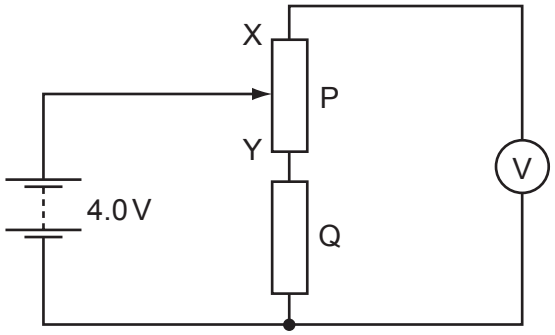

The slider on the potentiometer is moved from X to Y and a graph of voltmeter reading *V* is plotted against slider position.

Which graph would be obtained?

A

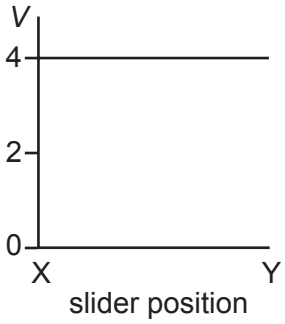

B

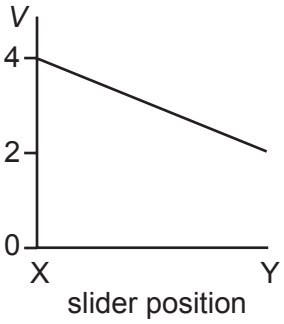

C

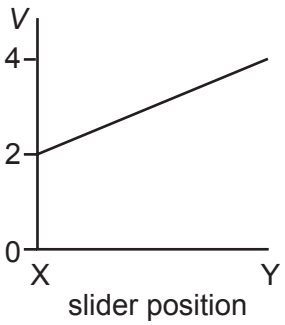

D

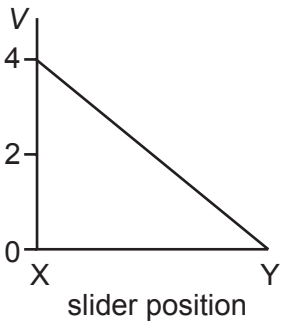

Space for working

38 Uranium-235 may be represented by the symbol $^{235}_{92}U$.

Which row shows the numbers of nucleons, protons and neutrons in a $^{235}_{92}U$ nucleus?

	nucleons	protons	neutrons
A	92	235	143
B	143	92	235
C	235	92	143
D	235	143	92

39 When a magnesium nucleus $^{25}_{12}Mg$ is hit by a gamma ray, a sodium nucleus $^{24}_{11}Na$ is formed and another particle is emitted.

What are the nucleon number (mass number) and proton number (atomic number) of the other particle produced in this nuclear reaction?

	nucleon number	proton number
A	0	–1
B	0	1
C	1	–1
D	1	1

40 Which nuclear equation shows the beta decay of a nucleus of argon (Ar) into potassium (K)?

A $^{44}_{21}Ar \rightarrow {}^{40}_{19}K + {}^{4}_{2}He$

B $^{40}_{20}Ar \rightarrow {}^{40}_{19}K + {}^{0}_{1}e$

C $^{40}_{18}Ar \rightarrow {}^{40}_{19}K + {}^{0}_{-1}e$

D $^{40}_{19}Ar \rightarrow {}^{40}_{19}K + {}^{0}_{0}\gamma$

Space for working

Permission to reproduce items where third-party owned material protected by copyright is included has been sought and cleared where possible. Every reasonable effort has been made by the publisher (UCLES) to trace copyright holders, but if any items requiring clearance have unwittingly been included, the publisher will be pleased to make amends at the earliest possible opportunity.

University of Cambridge International Examinations is part of the Cambridge Assessment Group. Cambridge Assessment is the brand name of University of Cambridge Local Examinations Syndicate (UCLES), which is itself a department of the University of Cambridge.

© UCLES 2010